M4-0-10-AIRFLOW RISER DIAGRAM
Project Management Initials:
Designer: Designer Checker: Checker Approved: Approver ARCH E1 30"x42"

Building Inspection Division
Lakeland
THESE PLANS HAVE BEEN REVIEWED FOR COMPLIANCE WITH THE CURRENT EDITION OF THE FLORIDA BUILDING CODE
Date: 11/15/19
Permit Number: BLD19-06035

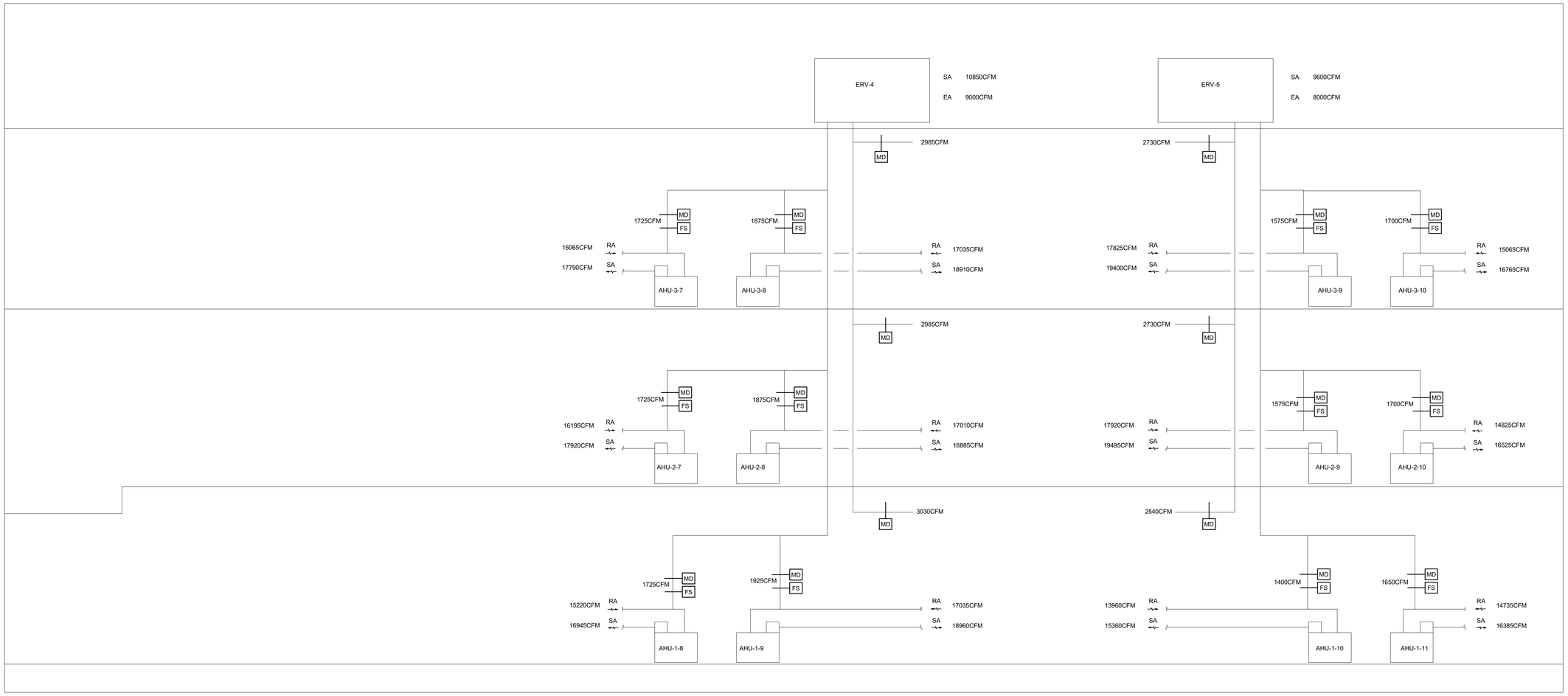

1 **Air Riser**

NOT TO SCALE

AECOM
BATSON-COOK CONSTRUCTION

PROJECT

PUBLIX HEADQUARTERS BUILDING ADDITION AND PARKING LOT EXPANSION

3300 PUBLIX CORPORATE PARKWAY
LAKELAND, FL 33811

CLIENT

Publix

3300 PUBLIX CORPORATE PARKWAY
LAKELAND, FL 33811

www.publix.com

CONSULTANT

AECOM

AECOM TECHNICAL SERVICES INC.
800 Douglas Entrance
North Tower, 2nd Floor
Coral Gables, FL 33134
305.444.4691 tel 305.447.3580 fax
www.aecom.com

ARCHTIECTURE
LICENSE NO. AA260000687

ENGINEERING
CA LIC. NO. 8115

www.aecom.com

REGISTRATION

JOHN TYE RECTOR
LICENSE
No. 53292
STATE OF
FLORIDA
PROFESSIONAL ENGINEER

JOHN T. RECTOR, PROFESSIONAL ENGINEER, STATE OF FLORIDA, LICENSE NO. 53292
08/22/19

John T Rector
John T Rector 2019.08.22 15:42:31 -04'00'

THIS ITEM HAS BEEN DIGITALLY SIGNED AND SEALED BY JOHN T. RECTOR, PROFESSIONAL ENGINEER, STATE OF FLORIDA, LICENSE NO. 53292 ON THE DATE ADJACENT TO THE SEAL. PRINTED COPIES OF THIS DOCUMENT MUST BE VERIFIED ON ANY ELECTRONIC COPIES.

NOTICE: THE OFFICIAL RECORD OF THIS SHEET IS THE ELECTRONIC FILE SIGNED AND SEALED UNDER RULE 61G15-23.004, F.A.C.

ISSUE/REVISION

I/R	DATE	DESCRIPTION
	AUG 23, 2019	CONSTRUCTION DOCUMENTS
	MAY 31, 2019	35% DESIGN COMPLETION

PROJECT NUMBER

60601397

SHEET TITLE

AIRFLOW RISER DIAGRAM

SHEET NUMBER

M4-0-10

Last Plotted: 8/22/2019 3:14:44 PM
Filename: BM:360/60601397-Publix HQ/60601397_Publix HQ_MECH_R2019.rvt

Printed on ___% Post-Consumer Recycled Content Paper

©2016 AECOM Corporation